RECENT PROGRESSES ON THE MARTIAN SOLAR AIRPLANE PROJECT SKY-SAILOR

A. Noth, W. Engel, R. Siegwart

Autonomous Systems Lab, Swiss Federal Institute of Technology of Zürich (ETHZ)
CLA E 16.2, Tannenstrasse 3,
8092 Zürich, Switzerland
andre.noth@mavt.ethz.ch , engel.w@bluewin.ch , rsiegwart@ethz.ch

ABSTRACT

The exploration of our neighbor planets, Mars for example, is a key challenge in space exploration for the next years. Ground robots, like MER or Pathfinder allowed interesting scientific mission and showed good results at the surface of the red planet. Anyway, they demonstrated as well an important limitation of range and maneuverability in rough terrain. The use of an aerial platform flying continuously with the only energy from the sun is an interesting approach in order to increase the mission coverage.

In year 2004, under contract with ESA, the ***Sky-Sailor Project*** *started to explore this direction. The goal was to study the feasibility of a Solar Powered Glider flying in the atmosphere of Mars by building and testing a demonstrator for Earth. This paper presents the results of two years of work on this project.*

INTRODUCTION AND MOTIVATION

The enabling technology for the realization of a solar powered micro-airplane with continuous flight capabilities on Earth is available today and this dream will come true on planet Mars in the near future. In fact, significant progresses have been realized in the domain of flexible solar cells, high energy density batteries, miniaturized MEMS and CMOS sensors, and powerful processors. However, major interdisciplinary effort is necessary to optimize and integrate concepts and technologies to a fully functional system. As a matter of fact, more than selecting the best components separately, the major issue is the combination of the right components together in order to maximize a certain criterion, for example the autonomy, one parameter being the embedded payload.

With the Sky-Sailor feasibility study in 2004 [11], the Autonomous Systems Lab, already very active in the domain of indoor aerial robotics, wanted to start the development of a prototype of solar powered micro-glider for Earth. It was intended to be fully autonomous in navigation and power generation and thus validate the feasibility of a Mars dedicated version.

The concept to use an UAV (Unmanned Aerial Vehicle) for the exploration of the red planet is not recent and gave rise to many projects. In the 1970's already, the Mini-Sniffer, a 6.7 m wingspan and hydrazine powered airplane, was designed, built and flown by NASA [1]. Several other planetary UAV projects with a large variety of concepts are in study, like inflatable wings glider [4], special helicopters [5,6], lighter than air balloons [7], flapping insect robots [8], etc. But the most famous martian UAV proposals are ARES (Aerial Regional-scale Environmental Survey) from NASA Langley Research Center [2] and the AME (Airplane for Mars Exploration) from NASA Ames Research Center [3].

Compared to ARES and AME, which can embed a scientific payload of around 20 kg a fly during 1.5 and 8.8 hours respectively, the idea with Sky-Sailor is to limit the payload to about 0.5 kg of lightweight sensors and scientific instruments, but achieve very long period missions of many months with extended coverage possibilities.

GLOBAL DESIGN OF THE AIRPLANE

The final objective being to fly continuously, the amount of energy collected from the solar panels during each day has to be sufficient to power the motor, the electronics and at the same time charge the battery that will ensure the flight by

night. Thus, the solar panels, the battery and the MPPT charger in between will determine the amount of energy that can be retrieved from the sun during the day and stored for the night. Then, the mass of these parts and the other airplane's elements, considering its aerodynamics and the efficiencies of the energy chain from the cells to the propeller, will specify the electrical energy required for leveled flight. Following this concept, schematically represented on Fig. 1, the design problem can be reduced to the resolution of the equality between obtained and consumed energy.

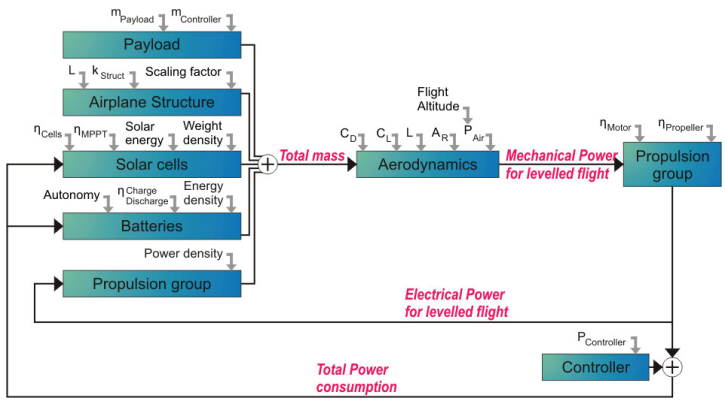

Fig. 1. Energetic balance for level flight with all the parameters

Anyway, the resolution of this problem is not trivial due to the various options possible for each component. In fact, whereas the choice of the battery technology is quite obvious as one simply looks for the highest energy density ratio, the selection between high efficiency, non-flexible, heavy and lightweight, flexible solar cells with lower efficiency is not.

After having set the primary requirements that are in our case 10 h autonomy and 0.5 kg payload, the optimization process starts. Fig. 2 presents how the wingspan, the flight altitude and the battery energy density are depending on each others for continuous flight. The wingspan, representing the scale of the airplane, is a key variable one can observe that there is an optimum at around 3.2 m. Based on this dimension, the complete layout of the airplane was defined, i.e the number of solar cells, the amount of battery,…

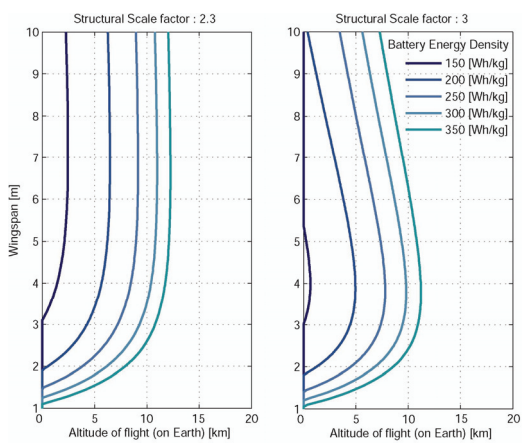

Fig. 2. The wingspan as a function of flight altitude and battery energy density for continuous flight

Continuous Flight Simulation

In order to validate the design process, a simulation environment was created on Matlab where a long duration solar flight can be simulated along time. The model, schematically represented on Fig. 3, contains first on the left an irradiance model based on [14] depending on geographic position, time and solar panels orientation. Then the characteristics of the solar panels, i.e surface, efficiency, as well as the efficieny of the MPPT are taken into account to

calculate the electric power retrieved. Depending on this last value and the total power consumption, which is the sum of the autopilot power consumption and the power needed for the flight, the battery is charged or discharged, taking into account the efficiency of the energy transfer and its saturation.

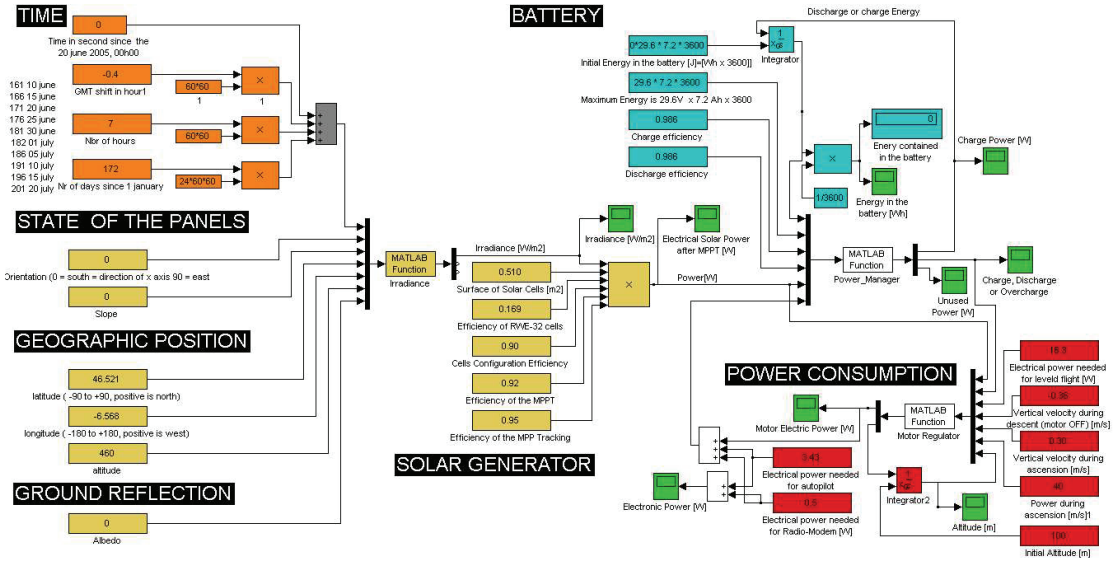

Fig. 3. Schematic of the simulation model under Matlab Simulink

The following graphs show the results of a simulation where Sky-Sailor starts a flight in Switzerland on the 21th of June with an empty battery, keeping always the same altitude. One can see the evolution of the power distribution during 48 hours. With good sun conditions, the battery is fully charged at 13h30 and at this moment, the energy coming from the panels only provides power the motor and stop charging the battery. This environment was also used to analyze the benefit of climbing phases or see the impact of solar panel damages on the feasibility of 24 hours flight.

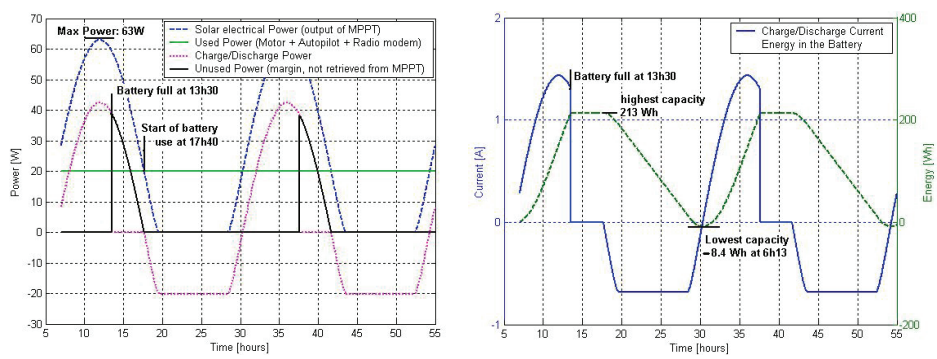

Fig. 4. Evolution of energy parameters during a 48 hours flight

DEVELOPMENT OF THE FIRST SKY-SAILOR PROTOTYPE

According the layout of the design phase, a fully functional prototype of Sky-Sailor was built. It is basically a motor-glider with a structural weight of only 0.725 kg for a 3.2 wingspan and a wing surface of 0.776 m^2 (Fig. 5). Its structure is composed of ribs made of composite material, with thin cover foils. The resulting total weight including motors, propeller, solar cells, batteries and controller is 2.6 kg. During nominal flight, the airplane speed is 8.2 m/s and the motor requires an electrical power of 16.25 W.

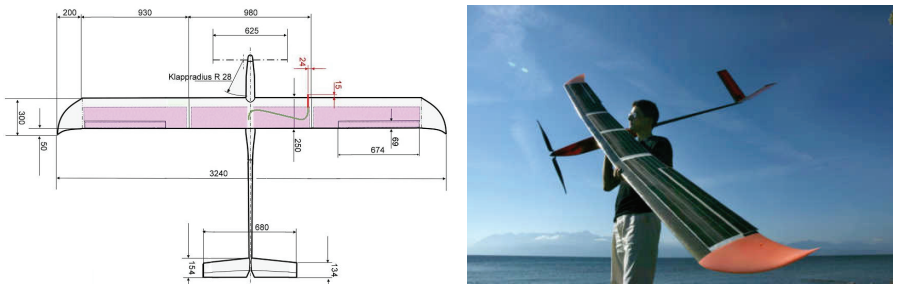

Fig. 5. Sky-Sailor first prototype

Solar generator system

The solar generator is first composed of 216 silicon cells separated into 3 panels covering 0.51 m^2 of the wing. This kind of cells are more suitable than high efficiency GaAs cells as they are more flexible and lightweight. They are encapsulated using a mechanically favorable symmetrical laminate combined with a fiber glass reinforced plastic coating what gives three non-reflective highly flexible modules. At maximum sun conditions, the available power is 28 W per module, which makes a total of 84 W. Three maximum power point trackers, basically DC/DC converters with variable gain, set the working point of the three panels to reach maximal power. With a total weight of 25.9 g, MPPTs can convert 90 W with up to 97% efficiency. They are charging the Lithium-Polymer battery, which has a total energy capacity of 233.5 Wh and nominal voltage of 29.6 V, with an algorithm avoiding overcharge that could lead to explosion.

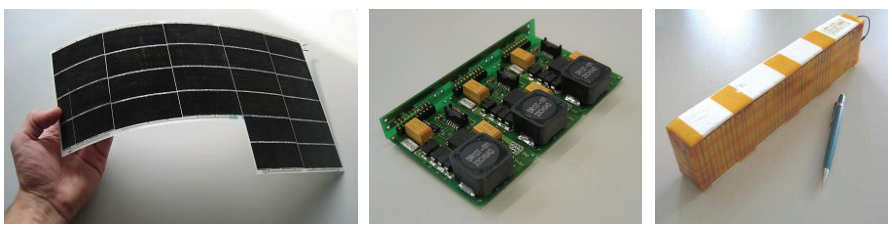

Fig. 6. Solar generator system with flexible solar panels, MPPTs and battery

Control and navigation system

Sky-Sailor will fly autonomously using an onboard low-power consumption autopilot, only high level orders being given from the ground. The system is mainly based on a DsPic that is interfaced to the various sensors and other electronics boards on the airplane, according to Fig. 7.

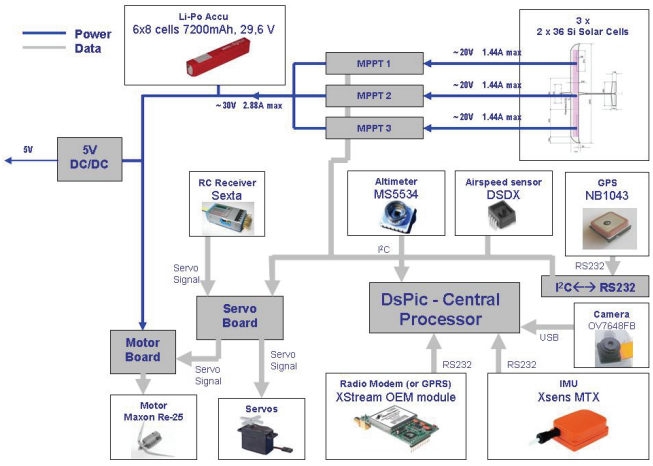

Fig. 7. Schematic view of the autopilot system

The sensor board contains a MS5534 absolute pressure sensor from Intersema is used for altitude, a CSDX gauge pressure sensor for the airspeed and a NB1043 GPS from Nemerix. For the orientation of the airplane, an MTX Inertial Measurement Unit with orientation output from Xsens is used.

The DsPic then gives commands to the actuators, i.e the motor and the servos actuating the control surfaces. This is done through a servo board that also receives commands from the operator on the ground. This board is completely independent from the processor so that, in case of problem, the operator is able to take control of the airplane manually. Manual control is also used for take-off, landing and during preliminary tests in order to tune the controller. The processor is as well connected to the three MPPTs to obtain information about the power retrieved from the solar panels. Finally, the autopilot board weighs 80 g and it power consumption is around 1.2 W.

Ground control station

The user can interact with the airplane using a ground control station (GCS) composed by a graphical user interface and a bidirectional radio-modem for communication. This allows to:

1. **monitor the state of the airplane** during flight and give fast visual feedback to the operator. The UAV's position and orientation are displayed on a 3D map and virtual instruments display speed, altitude, heading and attitude. Moreover, it is possible to monitor the amount of power coming from each solar panels, the power consumption of the motor and the charge status of the battery.
2. **edit parameters of the controller** that is running on-board the airplane in order to tune them directly during the flight experiments.
3. **edit flight trajectory or give other high level commands**.

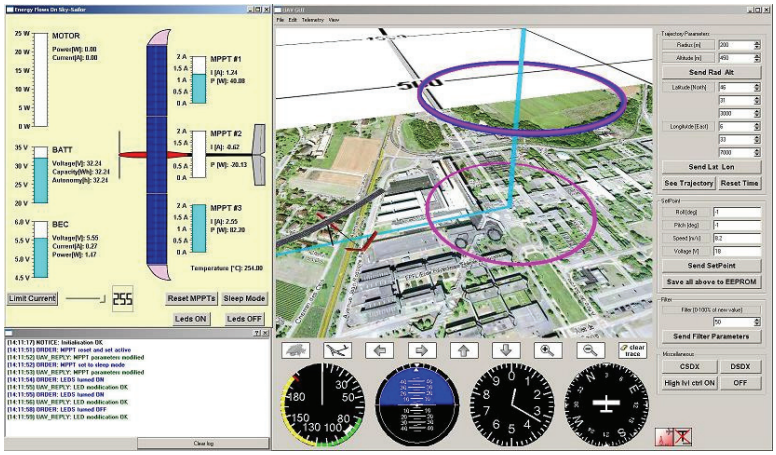

Fig. 8. Sky-Sailor graphical User Interface

For security, all commands coming from the ground are validated by the autopilot to the GCS again. Also, in case of communication losses, abnormal attitude or GPS problems, the interface warns the user so that he can quickly act according to the problem by controlling it with the remote control.

AIRPLANE MODELLING AND OPTIMAL CONTROL

Dynamic modeling is an important step in the development and the control of a dynamic system. In fact, the model allows analyzing the system, its possibilities and its behavior depending on various conditions. This is especially important for aerial robots where the risk of damage is very high, thus, the possibility to simulate and tune a controller before implementing it on the real machine is highly appreciable. That's the reason why a dynamic model of Sky-Sailor was developed using Lagrange-Euler formalism.

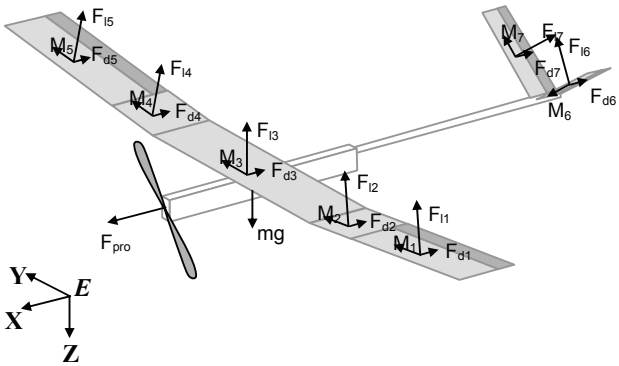

$$F_{tot} = F_{prop} + \sum_{i=1}^{7} F_{Li} + F_{di}$$

$$M_{tot} = \sum_{i=1}^{7} M_i + F_{Li} \times r_i + F_{di} \times r_i$$

$$\begin{cases} F_{prop} = f(\dot{x}, U_1) \\ F_{li} = C_{li} \dfrac{\rho}{2} S_i v^2 \\ F_{di} = C_{di} \dfrac{\rho}{2} S_i v^2 \\ M_i = C_{mi} \dfrac{\rho}{2} S_i v^2 \cdot chord_i \end{cases}$$

$$\begin{cases} [C_{l1}\ C_{d1}\ C_{m1}] = f(Aoa_i, U_2) \\ [C_{li}\ C_{di}\ C_{mi}] = f(Aoa_i) \quad \text{for i=2,3,4} \\ [C_{l5}\ C_{d5}\ C_{m5}] = f(Aoa_i, U_3) \\ [C_{l6}\ C_{d6}\ C_{m6}] = f(Aoa_i, U_4) \\ [C_{l7}\ C_{d7}\ C_{m7}] = f(Aoa_i, U_5) \end{cases}$$

Fig. 9. Forces and moments acting on Sky-Sailor

The forces acting on the airplane, represented on Fig. 9, are the weight located at the center of gravity, the thrust of the propeller in the x direction and the aerodynamic forces, i.e lift and drag, of the seven subparts of the wing and the V-tail. These one are depending on the relative airspeed, the angle of attack and the angle of the control surfaces. i.e the ailerons, elevator and rudder. The moments are the aerodynamic moments and those induced by forces acting at a certain distance of the center of gravity. Then, the model was developed and implemented on Matlab where it was validated with real experiments data.

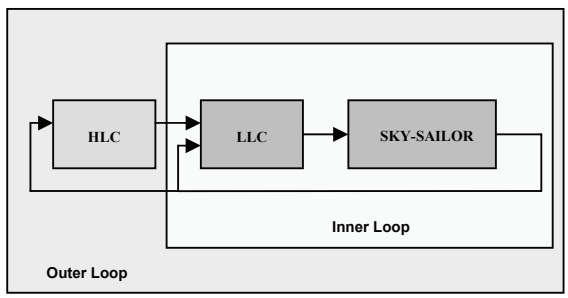

Fig. 10. Cascade controllers on Sky-Sailor

As depicted on Fig. 10, the controller is constituted by two different parts, an inner loop which role is to keep the stability of the system and an outer loop used to plan and follow the trajectory [15]. For the low level, an optimal linear state feedback control method, more in particular a Linear Quadratic Regulator is used. It is based on the built dynamic and aerodynamic model. For the high level part, the choice was to adapt an algorithm proposed and tested for the path tracking of a non-holonomous robot [16].

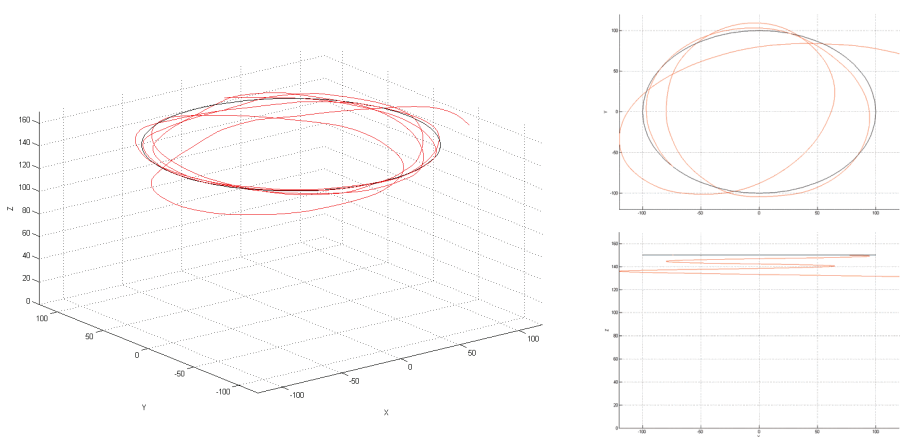

Fig. 11. HLC and LLC control with wind disturbs and farther initial position

After simulation with the airplane dynamic model, the final controller showed to be very robust in various conditions. Fig. 8 shows for example the trajectory of the airplane, flying at 8.2 m/s with wind turbulences of 2 m/s.

STATUS OF THE PROJECT AND PROJECT PLANNING

Sky-Sailor first prototype was first entirely built and tested with manual control in order to evaluate the flight characteristics that were excellent in terms of stability and maneuverability. The theoretical power consumption of 16.25 W has been validated with numerous flight experiments during which current and voltage values were measured.

Concerning the solar generator, the solar modules and the MPPTs were successfully integrated and the charge of the battery using only solar power was proved to be efficient and safe, avoiding overcharge. Globally, the simulation model presented in the second paragraph was validated and according to this, one can conclude that a 24 hours flight is feasible.

On the side of control and navigation, autonomous flights of Sky-Sailor were achieved using a previous version of the autopilot, the longest having lasted 5 hours. However, some technical problems like small interferences occurred. Efforts are now concentrated on the test of the new autopilot hardware and the controller in order to have a highly reliable system, before attempting a long endurance flight.

With the experience accumulated during these two years, one objective is to build a new prototype with a more important payload and use for it another building technique. A wing composed of a carbon, Kevlar and glass epoxy composite sandwich with molded in place solar cells using aluminium mould is considered.

CONCLUSION

The work achieved during 2 years on the Sky-Sailor project was presented in this paper. It led to a fully functional airplane with solar generator and autopilot system that was tested at low altitude and should in a near future achieve 24 hours flight power solely by solar energy. But beyond this first prototype, it led as well to the development of a global design methodology and many tools (electronic boards, measuring tools, simulation environments, dynamic models, control methods, etc.) that will be very useful for the continuation of the project.

The application of the design methodologies can be applied to an exploration aircraft on Mars, for which the main problem is currently battery technology that has to be improved, but as well for a micro-airplane flying on Earth where the applications are numerous. On can mention inspection from the air (pipelines,…), law enforcement, traffic monitoring, telecommunication, forest fire fighting, environmental data retrieving over long period or rescue mission.

We are strongly convinced that in a near future, long endurance solar airplanes will open new ways for planetary exploration and Earth observation.

ACKNOLEDGEMENTS

The authors would like to thank all the people who contributed to the definition study, Samir Bouabdallah for the appreciated interactions in the domain of flying robots and all the students who worked or are working on this project, especially Daisy Lachat, Xavier Raemy, Jean-Luc Brocard, Laurent Nguyen, Romain Delaluque, Alvaro Umberto Foletti and Andrea Mattio. We would like to acknowledge as well the important contribution of the Automatic Control Lab of EPFL, especially Sebastien Gros, Davide Buccieri, Phillipe Mullhaupt.

Thanks to the European Space Agency for the partial funding of the project, RWE-Space for their contribution with solar cells and Gochermann Solar Technology for the encapsulation of the solar modules.

REFERENCES

[1] James A. Murray and Paul V. Tartabini, *Development of a Mars Airplane Entry, Descent and Flight Trajectory*, AIAA Paper 2001-0839, 39th Aerospace Sciences Meeting and Exhibit, Reno, NV, Jan. 8-11, 2001.

[2] Mark. D. Guynn, Mark A. Croom, Stephen C. Smith, Robert W. Parks and Paul A. Gelhausen, *Evolution of a Mars Airplane Concept for the ARES Mars Scout Mission*, 2nd AIAA "Unmanned Unlimited" Systems, Technologies, and Operations —Aerospace, Land, and Sea Conference and Workshop & Exhibit, San Diego, California, AIAA 2003-6578, September 15-18, 2003.

[3] David W. Hall, Robert W. Parks, & Dr. Steve Morris, *Airplane for Mars exploration*, NASA/Ames Research Center Moffett Federal Airfield, California, May 27, 1997. http://www.redpeace.org/final_report.pdf

[4] Justin D. Kearns, Michiko Usui, Suzanne Weaver Smith, *Development of UV-Curable Inflatable Wings for Low-Density Flight Applications*, 45th AIAA/ASME/ASCE/AHS/ASC Structures, Structural Dynamics & Materials Conference, Palm Springs, California, AIAA 2004-1503, 19-22 April 2004.

[5] Young, L. A., Aiken, E. W., Derby, M. R., Demblewski, R., and Navarrete, J., *Experimental Investigation and Demonstration of Rotary-Wing Technologies for Flight in the Atmosphere of Mars*, Proceedings of the 58th Annual Forum of the American Helicopter Society, Montreal, Canada, June 11-13, 2002

[6] Hill, W., Mäusli, P.-A., Estier, T., Huber, R. and van Winnendael, M. (2000) *Using Microtechnologies to Build Micro-Robot Systems*. In Proceedings of the Sixth ESA Workshop on Advanced Space Technologies for Robotics and Automation, The Netherlands, December 5-7

[7] Alberto Elfes, Samuel Siqueira Bueno, Marcel Bergerman, Ely C. de Paiva, Josué Jr. Guimarães Ramos, José R. Azinheira: *Robotic Airships for Exploration of Planetary Bodies with an Atmosphere: Autonomy Challenges*, Autonomous Robots 14(2-3): 147-164, 2003.

[8] Robert C. Michelson, Messam A. Naqvi, *Extraterrestrial Flight (Entomopter-based Mars Surveyor)*, *Low Reynolds Number Aerodynamics on Aircraft Including Applications in Emerging UAV Technology*, Brussels Belgium, 24-28 November 2003

[9] Anthony Colozza, Analex Corporation, *Overview of Innovative Aircraft Power and Propulsion Systems and Their Applications for Planetary Exploration*, NASA, July 2003.

[10] Bernhard Keidel *Auslegung und Simulation von hochfliegenden, dauerhaft stationierbaren Solardrohnen*, PhD Thesis, Lehrstuhl für Flugmechanik und Flugregelung, Technische Universität München, 2000.

[11] A. Noth, S. Bouabdallah, S. Michaud, R. Siegwart and W. Engel, *Sky-Sailor, Design of an Autonomous Solar Powered Martian Airplane*, in Proc. 8th ESA Workshop Advanced Space Technologies Robotics Automation (ASTRA'2004), Noordwijk (Netherlands), Nov. 2–4, 2004.

[12] S. Michaud, S. Bouabdallah, R. Siegwart, W. Engel and A. Noth, *Star Tiger III project proposal*, July 2004, unpublished

[13] A. Noth, W. Engel, R. Siegwart, *Startiger III Bridging Phase Report*, September 2005, unpublished.

[14] J. A. Duffie and W.A. Beckman, *Solar Engineering of Thermal Processes*, Second Edition. New York, 1991: Wiley-Interscience.

[15] A. Mattio, *Modelling and Control of the UAV Sky-Sailor*, EPFL Master Project, Lausanne, July 2006, unpublished

[16] D. Buccieri, P. Mullhaupt, Z. Jiang, and D. Bonvin. *Velocity Scheduling Controller for a Nonholonomic Mobile Robot*. Chinese Control Conference, 2006.